RevNo	Revision note	Date	Signature	Checked
V1.0	Sketch only	30/05/2024		

RoHS Compliant.

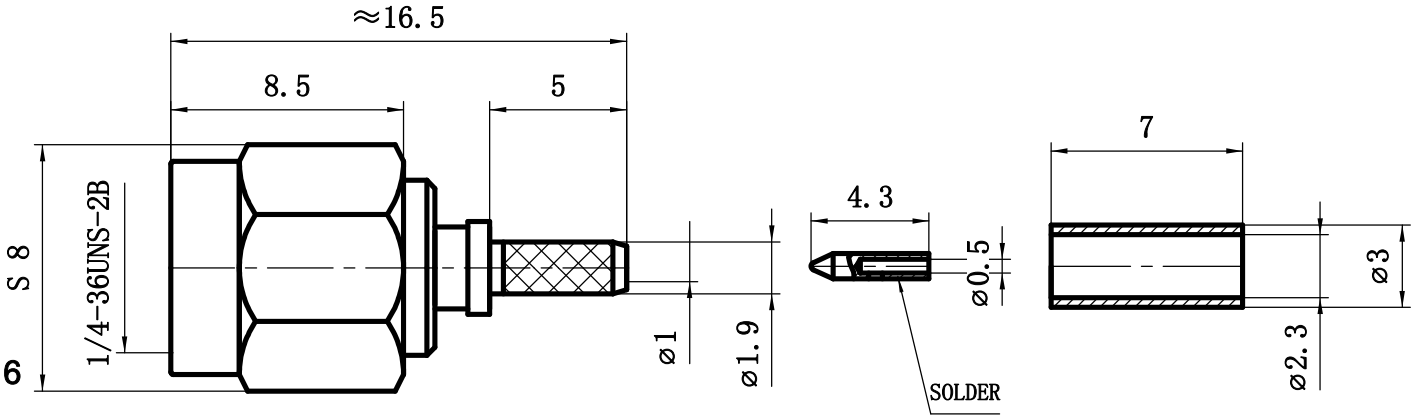

Interface Per: MIL-STD-348, IEC 60169-16

Cable Type: RG178

Material & Finishing:

1. Center condutor: Brass Gold Plating
2. Insulators: PTFE
3. Body : Brass, Gold Plating

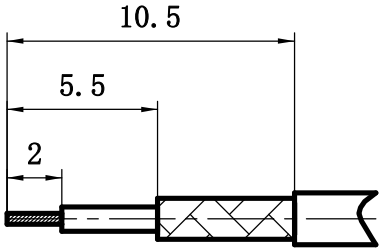

Suggested stripping

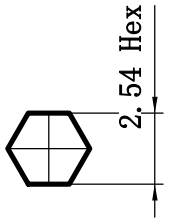

Recommended stamping
hexagonal die size (cannula)

Electrical Data:

1. Impedance: 50 Ohms
2. Frequency: 0~6GHz
3. VSWR:≤1.1@900MHz,
   ≤1.15@1800MHz,
   ≤1.2@3000MHz,
   ≤1.3@6000MHz,
4. Insertion loss: ≤0.05dB @ 900MHz,
   ≤0.05dB @ 1800MHz,
   ≤0.05dB @ 3000MHz,
   ≤0.1dB @ 6000MHz,
5. Dielectric Withstanding voltage:1000V Min
6. Voltage Rating : 500V Max

Package : 1 PC per bag

Laser Mark: LenoRF

Label Contet

LenoRF
Part No:3.12.1002
Part Name:SMA PLUG CRIMP FOR RG178 CABLE
QTY: 1 PC
Date:WW/YY(Week/year)

Unless otherwise specified, tolerances as below: .x ±0.15 .xx ±0.1 .xxx ±0.05 Angle: ±2°	Material:	See Notes	Weight	g	LenoRF	
	Finish:	See Notes	Scale	3:1		
	Unit	mm	Page	01		
	REV.	V1.0	p/n	01	DWG NO.	3.12.1002
Drawn		DATA:	Projection		Cust P/N.	TBD
Checked		DATA:	Title:	SMA PLUG CRIMP FOR RG178 CABLE		
Approved		DATA:				